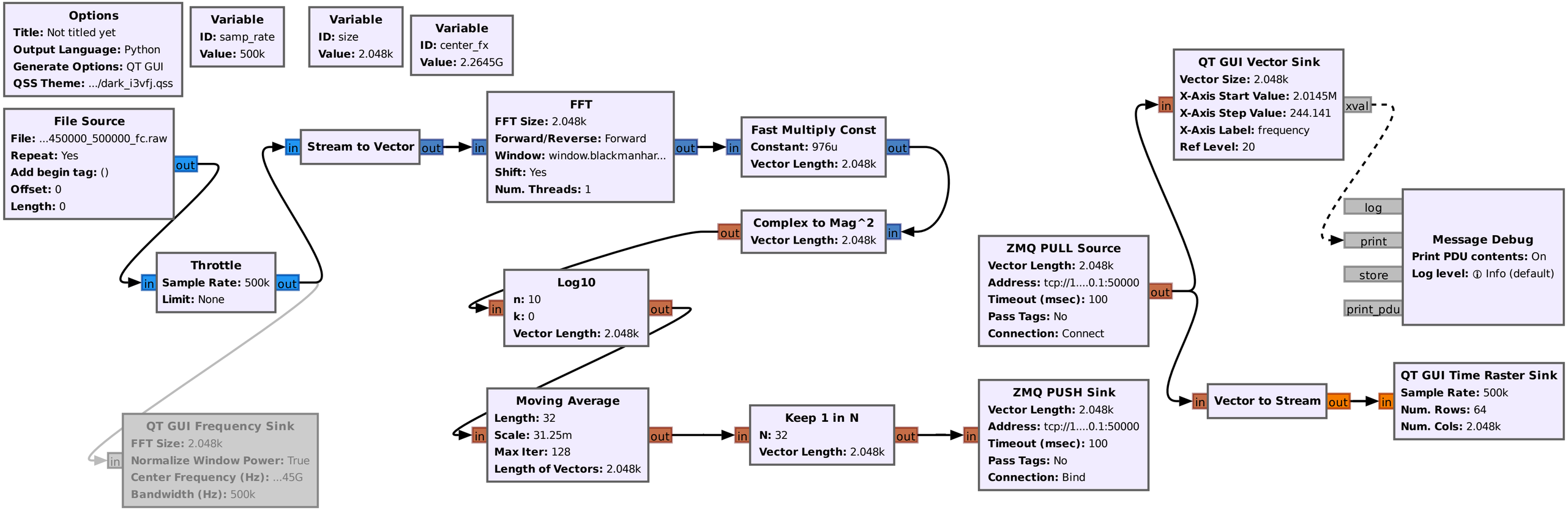
Options
Title: Not titled yet
Output Language: Python
Generate Options: QT GUI
QSS Theme: .../dark_i3vfj.qss
Variable
ID: samp_rate
Value: 500k
Variable
ID: size
Value: 2.048k
Variable
ID: center_fx
Value: 2.2645G
File Source
File: ...450000_500000_fc.raw
Repeat: Yes
Add begin tag: ()
Offset: 0
Length: 0
out
Throttle
Sample Rate: 500k
Limit: None
in
out
Stream to Vector
FFT
FFT Size: 2.048k
Forward/Reverse: Forward
Window: window.blackmanhar...
Shift: Yes
Num. Threads: 1
Fast Multiply Const
Constant: 976u
Vector Length: 2.048k
Complex to Mag^2
Vector Length: 2.048k
Log10
n: 10
k: 0
Vector Length: 2.048k
Moving Average
Length: 32
Scale: 31.25m
Max Iter: 128
Length of Vectors: 2.048k
Keep 1 in N
N: 32
Vector Length: 2.048k
QT GUI Frequency Sink
FFT Size: 2.048k
Normalize Window Power: True
Center Frequency (Hz): ...45G
Bandwidth (Hz): 500k
ZMQ PULL Source
Vector Length: 2.048k
Address: tcp://1....0.1:50000
Timeout (msec): 100
Pass Tags: No
Connection: Connect
ZMQ PUSH Sink
Vector Length: 2.048k
Address: tcp://1....0.1:50000
Timeout (msec): 100
Pass Tags: No
Connection: Bind
QT GUI Vector Sink
Vector Size: 2.048k
X-Axis Start Value: 2.0145M
X-Axis Step Value: 244.141
X-Axis Label: frequency
Ref Level: 20
xval
Message Debug
Print PDU contents: On
Log level: Info (default)
log
print
store
print_pdu
Vector to Stream
QT GUI Time Raster Sink
Sample Rate: 500k
Num. Rows: 64
Num. Cols: 2.048k